Euro Products

DL-06

- scan coin lamp
- checks authenticity of paper currency, cheques and credit cards
- ON/OFF button
- UV radiation
- no transformer or starter needed
- electronic start

Power supply: 230Vac 50Hz
Output power: 4W

	Part No.	Ord.No.
S	DL-06	53114

EURO Cash 1

- euro coin holder for all euro change
- hihg-quality product

Technical parameters:
Coins: 80x 1 ct, 80x 2 ct, 80x 5 ct, 70x 10 ct, 65x 20 ct, 30x 50 ct, 60x 1 EUR, 65x 2 EUR
Dimensions: 235x176x30 mm
Weight: 300g

	Part No.	Ord.No.
S	Euro Cash 1	67276

EURO Cash 2

- EURO cash made from hihg-quality steel sheet
- euro coin holder on the top
- paper currency holder at the bottom
- cylindrical lock , 2 keys
- hihg-quality product

Technical parameters:
Dimensions: 300x90x235 mm
Weight: 2,1 kg

	Part No.	Ord.No.
S	Euro Cash 2	67277

Eurocoin Sorter

- sorts 8 types of eurocoins from 1 Cent to 2 Euros

Power supply: 2 batteries "C" type (not included in delivery)
Dimensions: 265x140x245mm
Weight: 1,75kg

	Part No.	Ord.No.
S	Eurocoin sorter	67250

HS-7000T

- Ultrasonic cleaner
- provides precise cleaning of glasses, jewellery, watch and their parts, coins, dental plates etc.
- contains timer - 4/8/12 and 16 min. timing

Power supply: 230 VAC
Frequency: 42 kHz
Input power: 50W
Capacity: 0,5 l
Operating frequency: 42 kHz
Steel tank dimensions: 170x90x50 mm
External dimensions: 198x160x115 mm

	Part No.	Ord.No.
S	HS-7000T	56281

Thermal Printers

ITP-70021-628-GCT-232.S

FUJITSU

General features: handshake function, power self test, paper detection, auto load function, form feed, line feed function, RS232 interface.
Applications: text, graphic or bar code printing.
Extremely easy panel mounting, after cutting out the hole printer needs to be catch up with two screw.

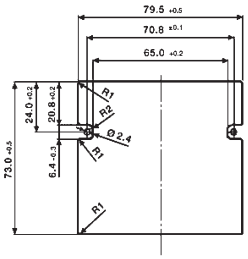

Technical parameters	ITP-70021-628-GCT-232.S
Print head power supply	4,2 - 8,5 VDC
Recommended voltage	7,2 VDC
Current consumption at 12,5% black	2A
Head drive control	5 VDC, consumption 100mA
Motor	4,2 - 8,5 VDC max. 1A current consumption
Power supply	5-8,5 VDC
Current consumption	120 mA
Operating temperature range	0°C to +50°C
Paper width	58 mm (paper roll diameter 30mm)
Effective print width	48mm
Dot density	8 dots/mm
Number of dots	384
Printing speed	60 mm/s
Dimensions	82,3x77,4x38,5mm

	Part No.	Ord.No.
S	ITP-70021-628-GCT-232.S	62218

FTP-628 MCL 101

FUJITSU

The easy loading FTP-628 MCL 101 Series is compact high speed, thermal printer, printing on 2-inch wide paper (58mm) where platens are removable. Original platen removal mechanism improved paper loading and maintenance.
The FTP-628 MCL series can be used for a variety of applications, such as portable terminals, POS, ticket issuing terminals, label printers, banking terminals, etc.

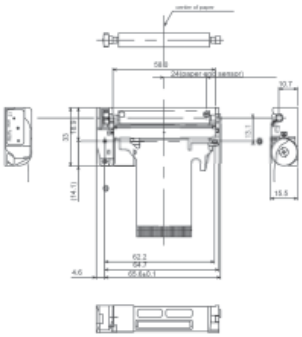

Technical parameters	ITP-70021-628-GCT-232.S
Print head power supply	4,2 - 8,5 VDC
Recommended voltage	7,2 VDC
Current consumption at 25% black	2A (maximum 6A at 100% black)
Head drive control	5 VDC, 100mA consumption
Motor	4,2 - 8,5 VDC max. 1A current consumption
Operating temperature range	0°C to +50°C
Paper width	58 mm
Effective print width	48mm
Dot density	8 dots/mm
Number of dots	384
Printing speed	60 mm/s
Dimensions	70,3x33,0x15,5mm

	Part No.	Ord.No.
O	FTP-628 MCL 101	61348