RoHS Compliant

Value Added ATA Disk Module Ⅲ

Specification for Standard ADM (40P/180D)

March 3, 2011

Revision 1.1

Apacer Technology Inc.
4th Fl., 75 Xintai 5th Rd., Sec.1, Hsichih, New Taipei City, Taiwan 221
Tel: +886-2-2698-2888 Fax: +886-2-2698-2889
www.apacer.com

Features:

- **Standard ATA/IDE bus interface**
  - ATA command set compatible
  - ATA operating mode supports up to:
    PIO Mode-4
    Multiword DMA Mode-2
    Ultra DMA Mode-4
- **Connector type**
  - 40-pin female connector
- **Low power consumption (typical)**
  - Supply voltage: 3.3V & 5V
  - Active mode: 85mA/95mA (3.3V/5V)
  - Sleep mode: 500µA /600µA (3.3V/5V)
- **Performance**
  - Sustained read: Up to 35 MB/sec
  - Sustained write:
    Standard: Up to 10 MB/sec
    High Speed: Up to 10 MB/sec
- **Capacity**
  - Standard:
    128, 256, 512 MB
    1, 2, 16 GB
  - High Speed:
    256, 512 MB
    1, 2, 4, 8 GB
- **NAND flash type: SLC**
- **Temperature ranges**
  - Operation:
    Standard: 0℃ to 70℃
    ET*: -40℃ to 85℃
  - Storage: -40℃ to 100℃
- **Flash management**
  - **Intelligent endurance design**
    Advanced wear-leveling algorithms
    S.M.A.R.T.
    Built-in hardware ECC
    Enhanced data integrity
  - **Intelligent power failure recovery**
  - **Enhanced security level**
    Secure protection zone
    ATA Secure Erase
- **RoHS compliant**

*Extended Temperature

© 2011 Apacer Technology Inc.

Table of Contents

1. GENERAL DESCRIPTION 3
1.1 PERFORMANCE-OPTIMIZED CONTROLLER 3
1.1.1 Power Management Unit (PMU) 3
1.1.2 SRAM Buffer 3
2. FUNCTIONAL BLOCK 4
3. PIN ASSIGNMENTS 5
4. CAPACITY SPECIFICATION 6
4.1 PERFORMANCE SPECIFICATION 6
4.2 ENVIRONMENTAL SPECIFICATION 7
5. FLASH MANAGEMENT 8
5.1 INTELLIGENT ENDURANCE DESIGN 8
5.1.1 Advanced wear-leveling algorithms 8
5.1.2 S.M.A.R.T. 8
5.1.3 Built-in hardware ECC 8
5.1.4 Enhanced data integrity 8
5.2 INTELLIGENT POWER FAILURE RECOVERY 9
5.3 ENHANCED SECURITY LEVEL 9
5.3.1 Secure protection zone 9
5.3.2 ATA Secure Erase 9
6. SOFTWARE INTERFACE 10
6.1 COMMAND SET 10
7. ELECTRICAL SPECIFICATION 12
8. PHYSICAL CHARACTERISTICS 13
8.1 DIMENSION 13
8.1.1 40 pin/ 180 degree w/o housing pin 20 blocked 13
8.1.2 40 pin/ 180 degree w/housing pin 20 blocked 14
9. PRODUCT ORDERING INFORMATION 15
9.1 PRODUCT CODE DESIGNATIONS 15
9.2 VALID COMBINATIONS 16
9.2.1 Pin 20 Blocked 16
9.2.2 Pin 20 Unblocked 17

© 2011 Apacer Technology Inc.

1. General Description

Apacer's ATA-Disk Module (ADM) is a high-performance, embedded flash drive designed to replace the conventional IDE hard disk drive. The ADMs can be plugged into a standard IDE connector commonly found in desktops, IT-STB, industrial PCs and thin client systems. Apacer's ADM SSD has a built-in microcontroller with file management firmware that communicates with the ATA standard interfaces. No additional or proprietary host software is required.

Well suited for embedded flash storage applications by offering new and expanded functionalities as well as more cost-effective designs, better performance and increased reliability, ADM is designed to work at either 5 or 3.3 Volts, supports the standard ATA/IDE protocol for up to PIO Mode-4, Multiword DMA Mode-2 and Ultra DMA Mode-4 interfaces, and uses the standard ATA driver complying with all major operating systems such as Microsoft's Windows series, Mac OS, and Unix variants.

Featuring technologies as Advanced Wear-leveling algorithms, S.M.A.R.T, Enhanced Data Integrity, Intelligent Power Failure Recovery, Secure Protection Zone and ATA Secure Erase, Apacer's ADM assures users of a versatile device on data storage.

1.1 Performance-Optimized Controller

The kernel of an ATA-Disk Module is the ATA controller, which translates standard ATA signals into the data and controls of the flash media. This proprietary ATA controller is specifically designed to attain high data throughput from the host to the flash.

1.1.1 Power Management Unit (PMU)

The power management unit (PMU) controls the power consumption of the ATA-Disk Module. It reduces the power consumption of the ATA-Disk Module Controller by putting circuitry not in operation into sleep mode. The PMU has zero wake-up latency.

1.1.2 SRAM Buffer

The ATA-Disk Module Controller performs as an SRAM buffer to optimize the host's data transfer to and from the flash media.

© 2011 Apacer Technology Inc.

2. Functional Block

The ATA-Disk Module (ADM) includes the ATA controller and flash media, as well as the ATA standard interface. Figure 2-1 shows the functional block diagram.

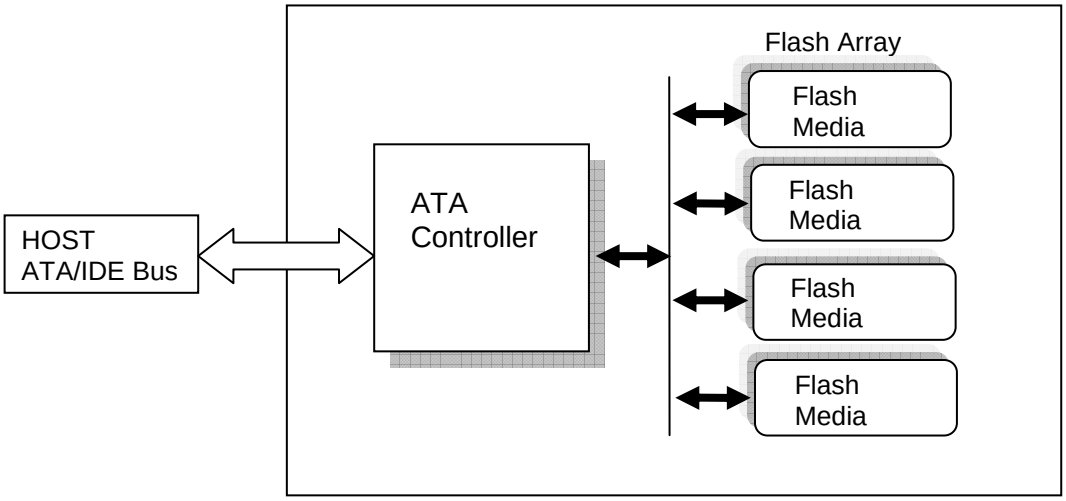

Figure 2-1: Functional block diagram

© 2011 Apacer Technology Inc.

3. Pin Assignments

Table 3-1 lists the pin assignments with respective signal names for the 40-pin configuration. A "#" suffix indicates the active low signal. The pin type can be input, output or input/output.

Table 3-1: Pin assignments for the 40-pin configuration

Pin No.	Signal Name	Pin Type	I/O Type	Pin No.	Signal Name	Pin Type	I/O Type
1	RESET#	I	I2U	2	GND	-	Ground
3	D7	I/O	I1Z, O2	4	D8	I/O	I1Z, O2
5	D6	I/O	I1Z, O2	6	D9	I/O	I1Z, O2
7	D5	I/O	I1Z, O2	8	D10	I/O	I1Z, O2
9	D4	I/O	I1Z, O2	10	D11	I/O	I1Z, O2
11	D3	I/O	I1Z, O2	12	D12	I/O	I1Z, O2
13	D2	I/O	I1Z, O2	14	D13	I/O	I1Z, O2
15	D1	I/O	I1Z, O2	16	D14	I/O	I1Z, O2
17	D0	I/O	I1Z, O2	18	D15	I/O	I1Z, O2
19	GND	-	Ground	20	NC	-	Power
21	DMARQ	O	O1	22	GND		Ground
23	IOWR# STOP	I	I2Z	24	GND	-	Ground
25	IORD# HDMARDY# HSTROBE#	I	I2Z	26	GND	-	Ground
27	IORDY DDMARDY# DSTROBE	O	O1	28	CSEL	I	I1U
29	DMACK#	I	I2U-	30	NC/WP#*	-/I	-/I1U
31	INTRQ	O	O1	32	IOCS16#	O	O2
33	A1	I	I1Z	34	PDIAG#	I/O	I1U, O1
35	A0	I	I1Z	36	A2	I	I1Z
37	CS1FX#	I	I2Z	38	CS3FX#	I	I2Z
39	DASP#	I/O	I1U, O6	40	GND	-	Ground

*****Pin 30 is selectable as NC or WP# through a zero ohm resistor jumper. Default is NC. Note that pin 30 is a GND pin on standard ATA interface. This pin could be redesigned for host to control the write protect function on ADM

© 2011 Apacer Technology Inc.

4. Capacity Specification

Capacity specification of the ATA-Disk Module (ADM) product family is available as shown in Table 4-1. It lists the specific capacity and the default numbers of heads, sectors and cylinders for each product line.

Table 4-1: Capacity specifications

Capacity	Total bytes*	Cylinders	Heads	Sectors	Max LBA
128 MB	128,057,344	977	8	32	250,112
256 MB	256,901,120	980	16	32	501,760
512 MB	512,483,328	993	16	63	1,000,944
1 GB	1,024,966,656	1986	16	63	2,001,888
2 GB	2,048,385,024	3969	16	63	4,000,752
4 GB	4,096,253,952	7937	16	63	8,000,496
8 GB	8,001,552,384	15504	16	63	15,628,032
16 GB	16,001,040,384	16383**	16	63	31,252,032

*Display of total bytes varies from file systems.
**Cylinders, heads or sectors are not applicable for these capacities. Only LBA addressing applies

4.1 Performance Specification

Performances of the ATA-Flash Disk are listed in Table 4-2 and Table 4-3.

Table 4-2: Standard Performance specifications

Capacity / Performance	128 MB / 256 MB 512 MB / 1 GB	2 GB	16 GB
Sustained read (MB/s)	15	20	20
Sustained write (MB/s)	5	5	10

Table 4-3: High Speed Performance specifications

Capacity / Performance	256 MB / 512 MB 1GB / 2 GB	4 GB / 8 GB
Sustained read (MB/s)	25	35
Sustained write (MB/s)	7	10

Note: Performances vary from flash configurations.

© 2011 Apacer Technology Inc.

4.2 Environmental Specification

Environmental specification of the ATA-Disk Module (ADM) product family follows the MIL-STD-810F standard which is shown in Table 4-4.

Table 4-4: Environmental specifications

Environment		Specification
Temperature	Operation	0℃ to 70℃; -40℃ to 85℃ (Extended Temperature)
	Storage	-40℃ to 100℃
Humidity		5% to 95% RH (Non-condensing)
Vibration (Non-Operation)		Sine wave: 10~2000Hz, 15G (X, Y, Z axes)
Shock (Non-Operation)		Half sine wave, Peak acceleration 50 G, 11 ms (X, Y, Z ; All 6 axes)

© 2011 Apacer Technology Inc.

5. Flash Management

5.1 Intelligent Endurance Design

5.1.1 Advanced wear-leveling algorithms

The NAND flash devices are limited by a certain number of write cycles. When using a file system, frequent file table updates is mandatory. If some area on the flash wears out faster than others, it would significantly reduce the lifetime of the whole device, even if the erase counts of others are far from the write cycle limit. Thus, if the write cycles can be distributed evenly across the media, the lifetime of the media can be prolonged significantly. The scheme is achieved both via buffer management and Apacer-specific advanced wear leveling to ensure that the lifetime of the flash media can be increased, and the disk access performance is optimized as well.

5.1.2 S.M.A.R.T.

S.M.A.R.T. is an acronym for Self-Monitoring, Analysis and Reporting Technology, an open standard allowing disk drives to automatically monitor their own health and report potential problems. It protects the user from unscheduled downtime by monitoring and storing critical drive performance and calibration parameters. Ideally, this should allow taking proactive actions to prevent impending drive failure. Apacer SMART feature adopts the standard SMART command B0h to read data from the drive. When the Apacer SMART Utility running on the host, it analyzes and reports the disk status to the host before the device is in critical condition.

5.1.3 Built-in hardware ECC

The ATA-Disk Module uses BCH Error Detection Code (EDC) and Error Correction Code (ECC) algorithms which correct up to eight random single-bit errors for each 512-byte block of data. High performance is fulfilled through hardware-based error detection and correction.

5.1.4 Enhanced data integrity

The properties of NAND flash memory make it ideal for applications that require high integrity while operating in challenging environments. The integrity of data to NAND flash memory is generally maintained through ECC algorithms and bad block management. Flash controllers can support up to 8 bits ECC capability for accuracy of data transactions, and bad block management is a preventive mechanism from loss of data by retiring unusable media blocks and relocating the data to the other blocks, along with the integration of advanced wear leveling algorithms, so that the lifespan of device can be expanded.

© 2011 Apacer Technology Inc.

5.2 Intelligent Power Failure Recovery

The Low Power Detection on the controller initiates cached data saving before the power supply to the device is too low. This feature prevents the device from crash and ensures data integrity during an unexpected blackout. Once power was failure before cached data writing back into flash, data in the cache will lost. The next time the power is on, the controller will check these fragmented data segment, and, if necessary, replace them with old data kept in flash until programmed successfully.

5.3 Enhanced Security Level

5.3.1 Secure protection zone

Partitioning with static commands to logically secure data, protection zones are the solid frameworks of file vaults. 3 different types of zones, unprotected, read-only, and restricted, are offered for effortless administration. When the product is shipped out of Apacer, all sectors are in the unprotected zone, which means there is no control on any data transaction. For further management control, the read-only zone can be set to be accessed exclusively for grantees, and the restricted zone, to be as the maximum security stockade with full administration privilege required. A maximum of 4 zones can be configured as either restricted or read-only zone presenting concurrently. The space outside these 4 zones is automatically in the unprotected zone if available. After the zone has been configured, the protection zone can be de-activated or re-activated by either software methods or hardware components. Protection zone configuration is non-volatile and it will be in effect until the next set of configuration overwrites it.

5.3.2 ATA Secure Erase

Accomplished by the Secure Erase (SE) command, which added to the open ANSI standards that control disk drives, “ATA Secure Erase” is built into the disk drive itself and thus far less susceptible to malicious software attacks than external software utilities. It is a positive easy-to-use data destroy command, amounting to electronic data shredding. Executing the command causes a drive to internally completely erase all possible user data. This command is carried out within disk drives, so no additional software is required. Once executed, neither data nor the erase counter on the device would be recoverable, which blurs the accuracy of device lifespan. The process to erase will not be stopped until finished while encountering power failure, and will be continued when power is back on.

© 2011 Apacer Technology Inc.

6. Software Interface

6.1 Command Set

This section defines the software requirements and the format of the commands the host sends to the ATA-Disk Module (ADM). Commands are issued to the ADM by loading the required registers in the command block with the supplied parameters, and then writing the command code to the Command register. The manner in which a command is accepted varies.

Table 6-1: Command set (1 of 2)

Command	Code	FR[1]	SC[2]	SN[3]	CY[4]	DH[5]	LBA[6]
Check-Power-Mode	E5H or 98H	-	-	-	-	D[8]	-
Execute-Drive-Diagnostic	90H	-	-	-	-	D	-
Erase Sector(s)	C0H	-	Y	Y	Y	Y	Y
Flush-Cache	E7H	-	-	-	-	D	-
Format Track	50H	-	Y[7]	-	Y	Y[8]	Y
Identify-Drive	ECH	-	-	-	-	D	-
Idle	E3H or 97H	-	Y	-	-	D	-
Idle-Immediate	E1H or 95H	-	-	-	-	D	-
Initialize-Drive-Parameters	91H	-	Y	-	-	Y	-
NOP	00H	-	-	-	-	D	-
Read-Buffer	E4H	-	-	-	-	D	-
Read-DMA	C8H or C9H	-	Y	Y	Y	Y	Y
Read-Multiple	C4H	-	Y	Y	Y	Y	Y
Read-Sector(s)	20H or 21H	-	Y	Y	Y	Y	Y
Read-Verify-Sector(s)	40H or 41H	-	Y	Y	Y	Y	Y
Recalibrate	1XH	-	-	-	-	D	-
Request-Sense	03H	-	-	-	-	D	-
Security-Disable-Password	F6H	-	-	-	-	D	-
Security-Erase-Prepare	F3H	-	-	-	-	D	-
Security-Erase-Unit	F4H	-	-	-	-	D	-
Security-Freeze-Lock	F5H	-	-	-	-	D	-
Security-Set-Password	F1H	-	-	-	-	D	-
Security-Unlock	F2H	-	-	-	-	D	-
Seek	7XH	-	-	Y	Y	Y	Y
Set-Features	EFH	Y[7]	-	-	-	D	-

© 2011 Apacer Technology Inc.

Table 6-1: Command set (2 of 2)

Command	Code	FR[1]	SC[2]	SN[3]	CY[4]	DH[5]	LBA[6]
SMART	B0H	Y	Y	Y	Y	D	
Set-Multiple-Mode	C6H	-	Y	-	-	D	-
Set-Sleep-Mode	E6H or 99H	-	-	-	-	D	-
Standby	E2H or 96H	-	-	-	-	D	-
Standby-Immediate	E0H or 94H	-	-	-	-	D	-
Translate-Sector	87H	-	Y	Y	Y	Y	Y
Write-Buffer	E8H	-	-	-	-	D	-
Write-DMA	CAH or CBH	-	Y	Y	Y	Y	Y
Write-Multiple	C5H	-	Y	Y	Y	Y	Y
Write-Multiple-Without-Erase	CDH	-	Y	Y	Y	Y	Y
Write-Sector(s)	30H or 31H	-	Y	Y	Y	Y	Y
Write-Sector-Without-Erase	38H	-	Y	Y	Y	Y	Y
Write-Verify	3CH	-	Y	Y	Y	Y	Y

1. FR - Features register
2. SC - Sector Count register
3. SN - Sector Number register
4. CY - Cylinder registers
5. DH - Drive/Head register
6. LBA - Logical Block Address mode supported (see command descriptions for use)
7. Y - The register contains a valid parameter for this command
8. For the Drive/Head register:
Y means both the ATA-Disk Module and Head parameters are used
D means only the ATA-Disk Module parameter is valid and not the Head parameter

© 2011 Apacer Technology Inc.

7. Electrical Specification

Caution: **Absolute Maximum Stress Ratings –** Applied conditions greater than those listed under "Absolute Maximum Stress Ratings" may cause permanent damage to the device. This is a stress rating only and functional operation of the device at these conditions or conditions greater than those defined in the operational sections of this data sheet is not implied. Exposure to absolute maximum stress rating conditions may affect device reliability.

Table 7-1: Operating range

Range	Ambient Temperature	3.3V	5V
Standard	0℃ to +70℃	3.135-3.465V	4.75-5.25V
Extended Temperature	-40℃ to +85℃		

Table 7-2: Absolute maximum power pin stress ratings

Parameter	Symbol	Conditions
Input Power	V_{DD}	-0.3V min. to 6.5V max.
Voltage on any pin except V_{DD} with respect to GND	V	-0.5V min. to VDD + 0.5V max.

Table 7-3: Recommended system power-up timing

Symbol	Parameter	Typical	Maximum	Units
$T_{PU\text{-}READY}$[1]	Power-up to Ready Operation	200	1000	ms
$T_{PU\text{-}WRITE}$[1]	Power-up to Write Operation	200	1000	ms

1. This parameter is measured only for initial qualification and after a design or process change that could affect this parameter.

© 2011 Apacer Technology Inc.

8. Physical Characteristics

8.1 Dimension

8.1.1 40 pin/ 180 degree w/o housing pin 20 blocked

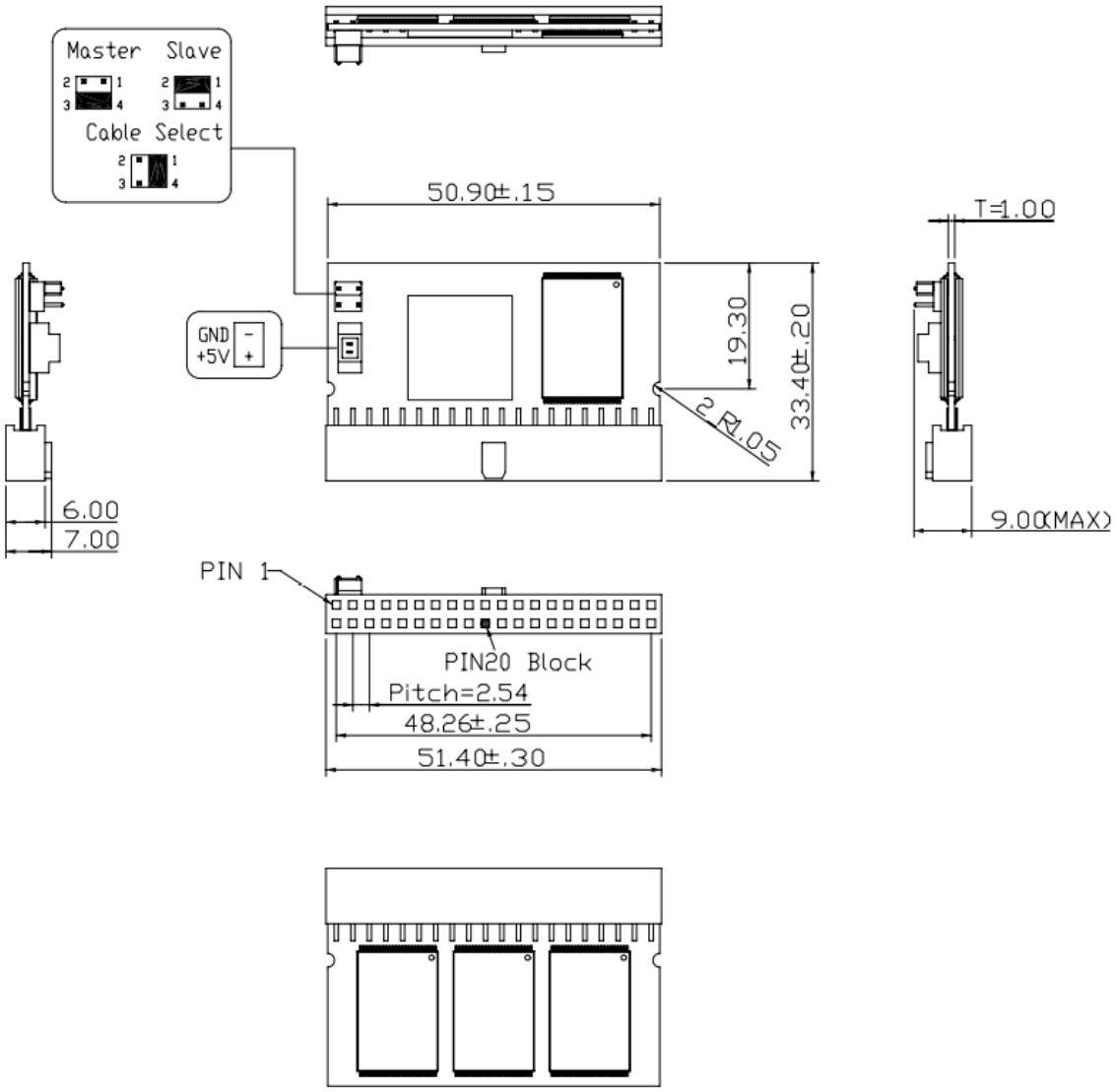

Unit: ㎜
Tolerance: ±0.2 ㎜

© 2011 Apacer Technology Inc.

8.1.2 40 pin/ 180 degree w/housing pin 20 blocked

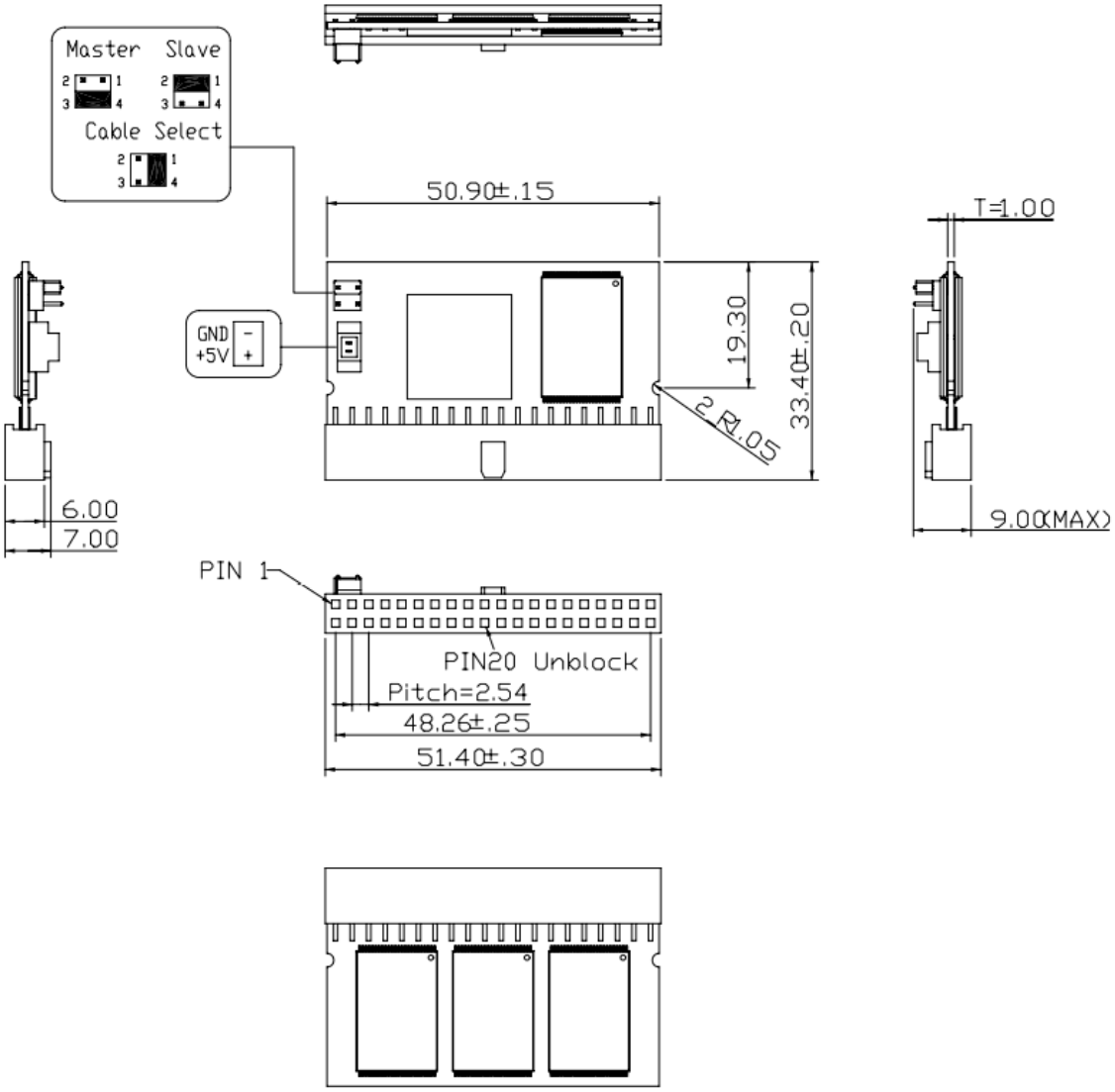

Unit: ㎜
Tolerance: ±0.2 ㎜

© 2011 Apacer Technology Inc.

9. Product Ordering Information

9.1 Product Code Designations

AP – FM xxxx E X 0 X X R – X X X

Temperature:
Blank: Standard
W: Wild Temperature

Flash Type

F/W Version

Environmental Spec

Voltage:
3: 3.3V
5: 5.0V

Performance:
S: Standard
D: High Speed

PCB Version

Package Modifier:
4 = 40 pin/180D Pin 20 Blocked
D = 40pin/180D Pin 20 Unblocked

Controller Version

Capacity:

0128:	128MB
0256:	256MB
0512:	512MB
001G:	1GB
002G:	2GB
004G:	4GB
008G:	8GB
016G:	16GB

Model Name

Apacer Product Code

© 2011 Apacer Technology Inc.

9.2 Valid Combinations

9.2.1 Pin 20 Blocked

Standard

Capacity	P/N (3.3V)	P/N (5V)
128MB	AP-FM0128E40S3R-KS	AP-FM0128E40S5R-KS
256MB	AP-FM0256E40S3R-KS	AP-FM0256E40S5R-KS
512MB	AP-FM0512E40S3R-KS	AP-FM0512E40S5R-KS
1GB	AP-FM001GE40S3R-KS	AP-FM001GE40S5R-KS
2GB	AP-FM002GE40S3R-KS	AP-FM002GE40S5R-KS
16GB	AP-FM016GE40S3R-KT	AP-FM016GE40S5R-KT

Hi-Speed

Capacity	P/N (3.3V)	P/N (5V)
256MB	AP-FM0256E40D3R-KS	AP-FM0256E40D5R-KS
512MB	AP-FM0512E40D3R-KS	AP-FM0512E40D5R-KS
1GB	AP-FM001GE40D3R-KS	AP-FM001GE40D5R-KS
2GB	AP-FM002GE40D3R-KS	AP-FM002GE40D5R-KS
4GB	AP-FM004GE40D3R-KS	AP-FM004GE40D5R-KS
8GB	AP-FM008GE40D3R-KS	AP-FM008GE40D5R-KS

Ext. Temp Standard

Capacity	P/N (3.3V)	P/N (5V)
128MB	AP-FM0128E40S3R-KSW	AP-FM0128E40S5R-KSW
256MB	AP-FM0256E40S3R-KSW	AP-FM0256E40S5R-KSW
512MB	AP-FM0512E40S3R-KSW	AP-FM0512E40S5R-KSW
1GB	AP-FM001GE40S3R-KSW	AP-FM001GE40S5R-KSW
2GB	AP-FM002GE40S3R-KSW	AP-FM002GE40S5R-KSW
16GB	AP-FM016GE40S3R-KTW	AP-FM016GE40S5R-KTW

Ext. Temp Hi-Speed

Capacity	P/N (3.3V)	P/N (5V)
256MB	AP-FM0256E40D3R-KSW	AP-FM0256E40D5R-KSW
512MB	AP-FM0512E40D3R-KSW	AP-FM0512E40D5R-KSW
1GB	AP-FM001GE40D3R-KSW	AP-FM001GE40D5R-KSW
2GB	AP-FM002GE40D3R-KSW	AP-FM002GE40D5R-KSW
4GB	AP-FM004GE40D3R-KSW	AP-FM004GE40D5R-KSW
8GB	AP-FM008GE40D3R-KSW	AP-FM008GE40D5R-KSW

© 2011 Apacer Technology Inc.

9.2.2 Pin 20 Unblocked

Standard

Capacity	P/N (3.3V)	P/N (5V)
128MB	AP-FM0128ED0S3R-KS	AP-FM0128ED0S5R-KS
256MB	AP-FM0256ED0S3R-KS	AP-FM0256ED0S5R-KS
512MB	AP-FM0512ED0S3R-KS	AP-FM0512ED0S5R-KS
1GB	AP-FM001GED0S3R-KS	AP-FM001GED0S5R-KS
2GB	AP-FM002GED0S3R-KS	AP-FM002GED0S5R-KS
16GB	AP-FM016GED0S3R-KT	AP-FM016GED0S5R-KT

Hi-Speed

Capacity	P/N (3.3V)	P/N (5V)
256MB	AP-FM0256ED0D3R-KS	AP-FM0256ED0D5R-KS
512MB	AP-FM0512ED0D3R-KS	AP-FM0512ED0D5R-KS
1GB	AP-FM001GED0D3R-KS	AP-FM001GED0D5R-KS
2GB	AP-FM002GED0D3R-KS	AP-FM002GED0D5R-KS
4GB	AP-FM004GED0D3R-KS	AP-FM004GED0D5R-KS
8GB	AP-FM008GED0D3R-KS	AP-FM008GED0D5R-KS

Ext. Temp Standard

Capacity	P/N (3.3V)	P/N (5V)
128MB	AP-FM0128ED0S3R-KSW	AP-FM0128ED0S5R-KSW
256MB	AP-FM0256ED0S3R-KSW	AP-FM0256ED0S5R-KSW
512MB	AP-FM0512ED0S3R-KSW	AP-FM0512ED0S5R-KSW
1GB	AP-FM001GED0S3R-KSW	AP-FM001GED0S5R-KSW
2GB	AP-FM002GED0S3R-KSW	AP-FM002GED0S5R-KSW
16GB	AP-FM016GED0S3R-KTW	AP-FM016GED0S5R-KTW

Ext. Temp Hi-Speed

Capacity	P/N (3.3V)	P/N (5V)
256MB	AP-FM0256ED0D3R-KSW	AP-FM0256ED0D5R-KSW
512MB	AP-FM0512ED0D3R-KSW	AP-FM0512ED0D5R-KSW
1GB	AP-FM001GED0D3R-KSW	AP-FM001GED0D5R-KSW
2GB	AP-FM002GED0D3R-KSW	AP-FM002GED0D5R-KSW
4GB	AP-FM004GED0D3R-KSW	AP-FM004GED0D5R-KSW
8GB	AP-FM008GED0D3R-KSW	AP-FM008GED0D5R-KSW

© 2011 Apacer Technology Inc.

Revision History

Revision	Date	Description	Remark
1.0	07/28/2009	Official release	
1.1	03/03/2011	Updated Product Ordering Information	

© 2011 Apacer Technology Inc.

Global Presence

Taiwan (Headquarters)

Apacer Technology Inc.
4th Fl., 75 Xintai 5th Rd., Sec.1
Hsichih, New Taipei City
Taiwan 221
R.O.C.
Tel: +886-2-2698-2888
Fax: +886-2-2698-2889
amtsales@apacer.com

U.S.A.

Apacer Memory America, Inc.
386 Fairview Way, Suite102,
Milpitas, CA 95035
Tel: 1-408-518-8699
Fax: 1-408-935-9611
sa@apacerus.com

Japan

Apacer Technology Corp.
5F, Matsura Bldg., Shiba, Minato-Ku
Tokyo, 105-0014, Japan
Tel: 81-3-5419-2668
Fax: 81-3-5419-0018
jpservices@apacer.com

Europe

Apacer Technology B.V.
Aziëlaan 22,
5232 BA 's-Hertogenbosch,
The Netherlands
Tel: 31-73-645-9620
Fax: 31-73-645-9629
sales@apacer.nl

China

Apacer Electronic (Shanghai) Co., Ltd
1301, No.251,Xiaomuqiao Road, Shanghai,
200032, China
Tel: 86-21-5529-0222
Fax: 86-21-5206-6939
sales@apacer.com.cn

India

Apacer Technologies Pvt Ltd,
#1064, 1st Floor, 7th 'A' Main,
3rd Block Koramangala, Bangalore – 560 034
Tel: +91 80 4152 9061/62/63
Fax: +91 80 4170 0215
sales_india@apacer.com

© 2011 Apacer Technology Inc.